GAS BURNERS

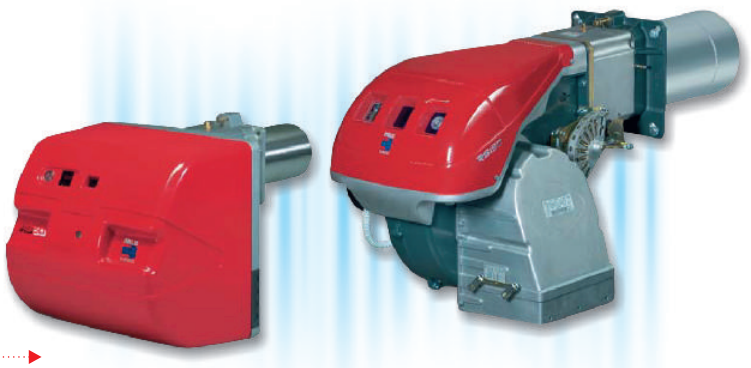

RIELLO BURNERS

EN 676
E.M.C. 89/336/EEC

ONE STAGE - VOLTAGE 1 X 230V

TYPE	POWER (Kw)	GAS SUPPLY (Nm^3/h)	MULTIBLOC	DIAMETER	LENGTH OF FLAME TUBE mm	EURO
RS 34/1 t.c	70 - 360	7 - 36	MBD 412	1 1/4	216	**2.487,00**
RS 34/1 t.l	70 - 360	7 - 36	MBD 412	1 1/4	351	**2.553,00**
RS 44/1 t.c	100 - 500	10 - 50	MBD 415	1 1/2	216	**2.986,00**
RS 44/1 t.l	100 - 500	10 - 50	MBD 415	1 1/2	351	**3.051,00**

TWO STAGE - VOLTAGE 1 X 230V

TYPE	POWER (Kw)	GAS SUPPLY (Nm^3/h)	MULTIBLOC	DIAMETER	LENGTH OF FLAME TUBE mm	EURO
RS 34 t.c	70 - 390	7 - 39	MBD 415	1 1/2	216	**3.090,00**
RS 34 t.l	70 - 390	7 - 39	MBD 415	1 1/2	351	**3.155,00**
RS 44 t.c	100 - 550	10 - 55	MBD 420	2"	216	**3.541,00**
RS 44 t.l	100 - 550	10 - 55	MBD 420	2"	351	**3.607,00**

TWO STAGE - VOLTAGE 3 X 230V

TYPE	POWER (Kw)	GAS SUPPLY (Nm^3/h)	MULTIBLOC	DIAMETER	LENGTH OF FLAME TUBE mm	EURO
RS 50 t.c	116/290 - 581	12/29 - 58	MBD 415	1 1/2	216	**3.547,00**
RS 50 t.l	116/290 - 581	12/29 - 58	MBD 415	1 1/2	351	**3.625,00**
RS 70 t.l	192/465 -715	19/46 - 71	MBD 420	2"	385	**4.675,00**
RS 70 t.l	192/465 - 814	19/46 - 81	MBC 1200	DN 65	385	**6.145,00**
RS 100 t.l	232/698 - 1163	23/70 - 116	MBD 415 (1)	1 1/2	385	**5.290,00**
RS 130 t.l	372/930 - 1512	37/93 - 151	MBD 415 (1)	1 1/2	415	**5.955,00**
RS 190	470/1279 - 2290	47/128 - 229	MBD 420 (1)	2"	372	**7.605,00**

(1) Multibloc for inlet pressure 100mbar.

* In cases that the burner will operate with LPG. Should be replaced at the head with the relative cost.

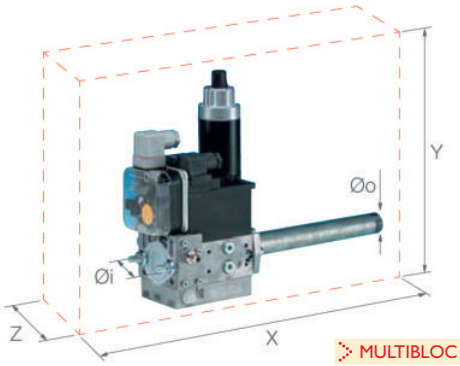

MULTIBLOC MBD

Head of burner

